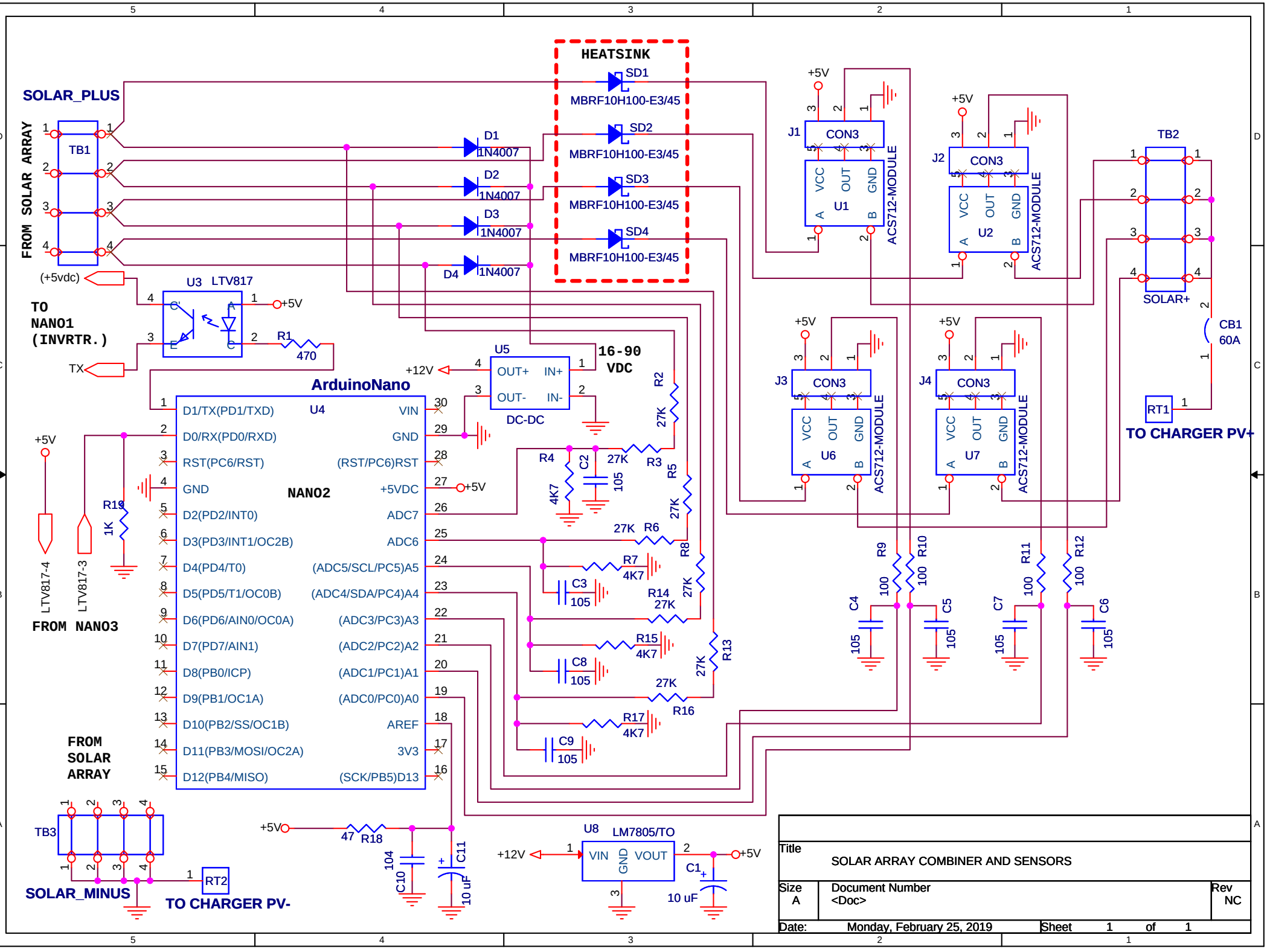

Title	SOLAR ARRAY COMBINER AND SENSORS	
Size A	Document Number <Doc>	Rev NC
Date: Monday, February 25, 2019	Sheet 1 of 1	