Direct PV to HWC Element
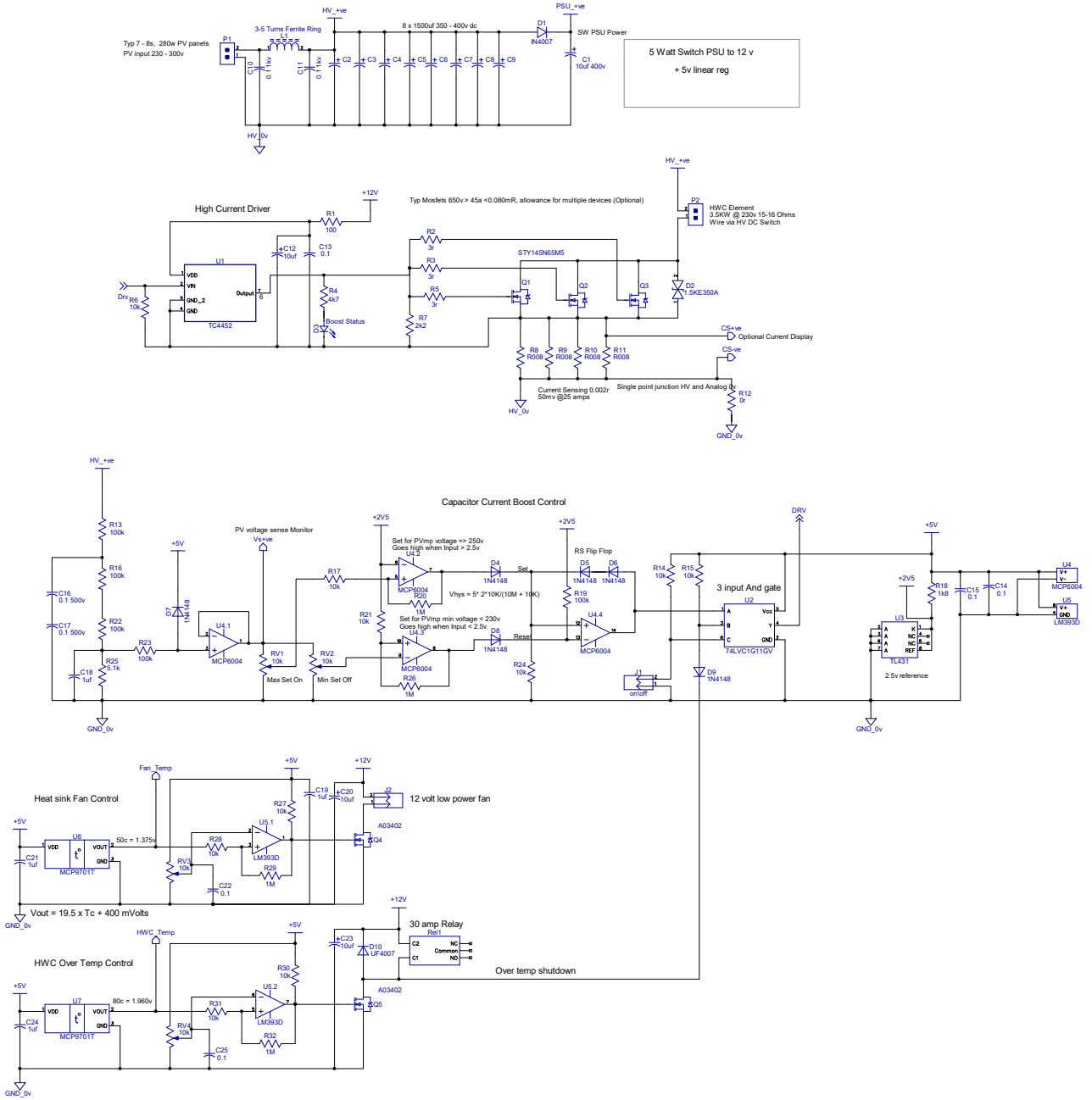
Mike Scaife
RM Software, Wellington 23/6/2019
Ver 101b