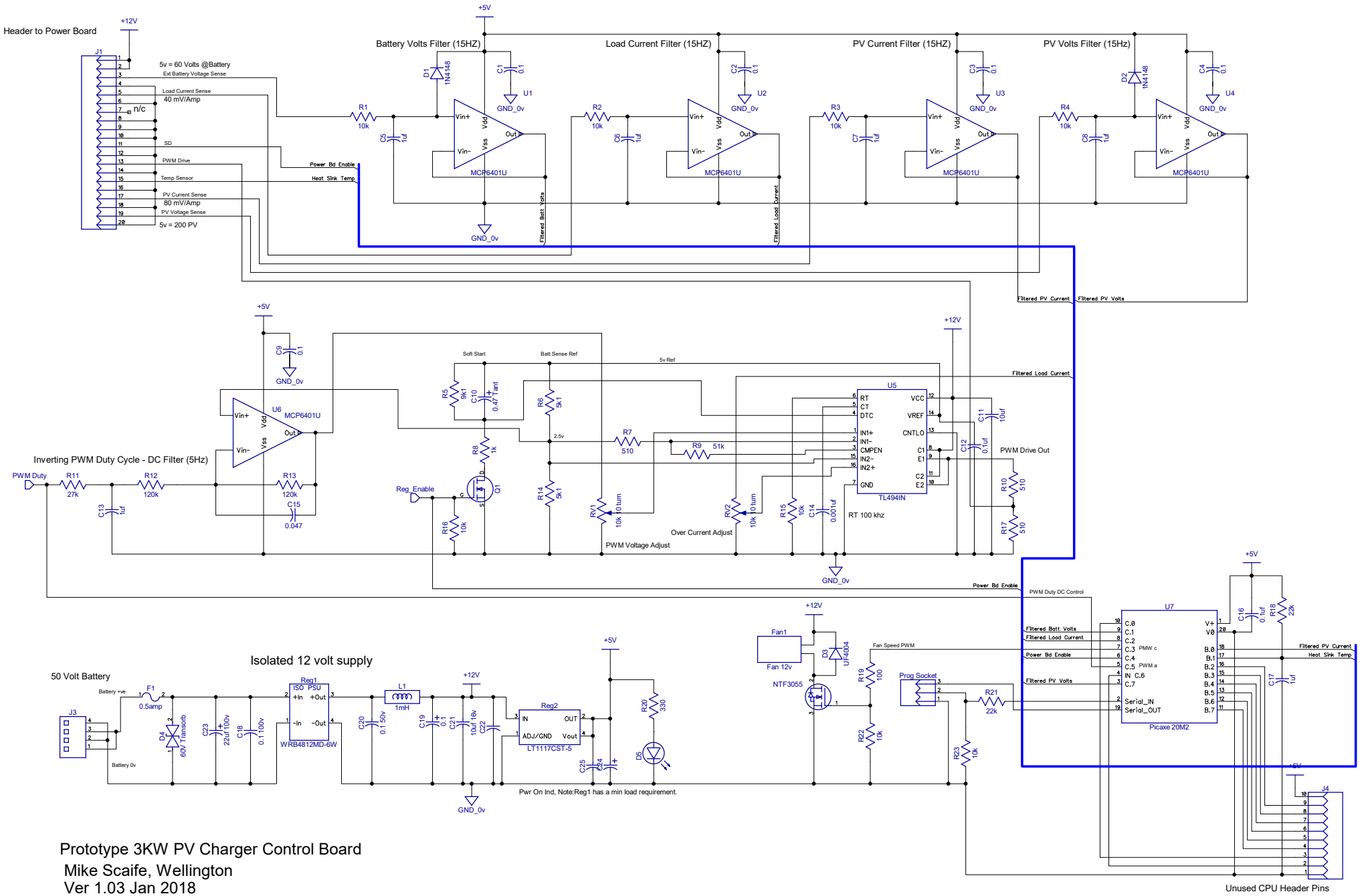


Prototype 3KW PV Charger Control Board

Mike Scaife, Wellington

Ver 1.03 Jan 2018