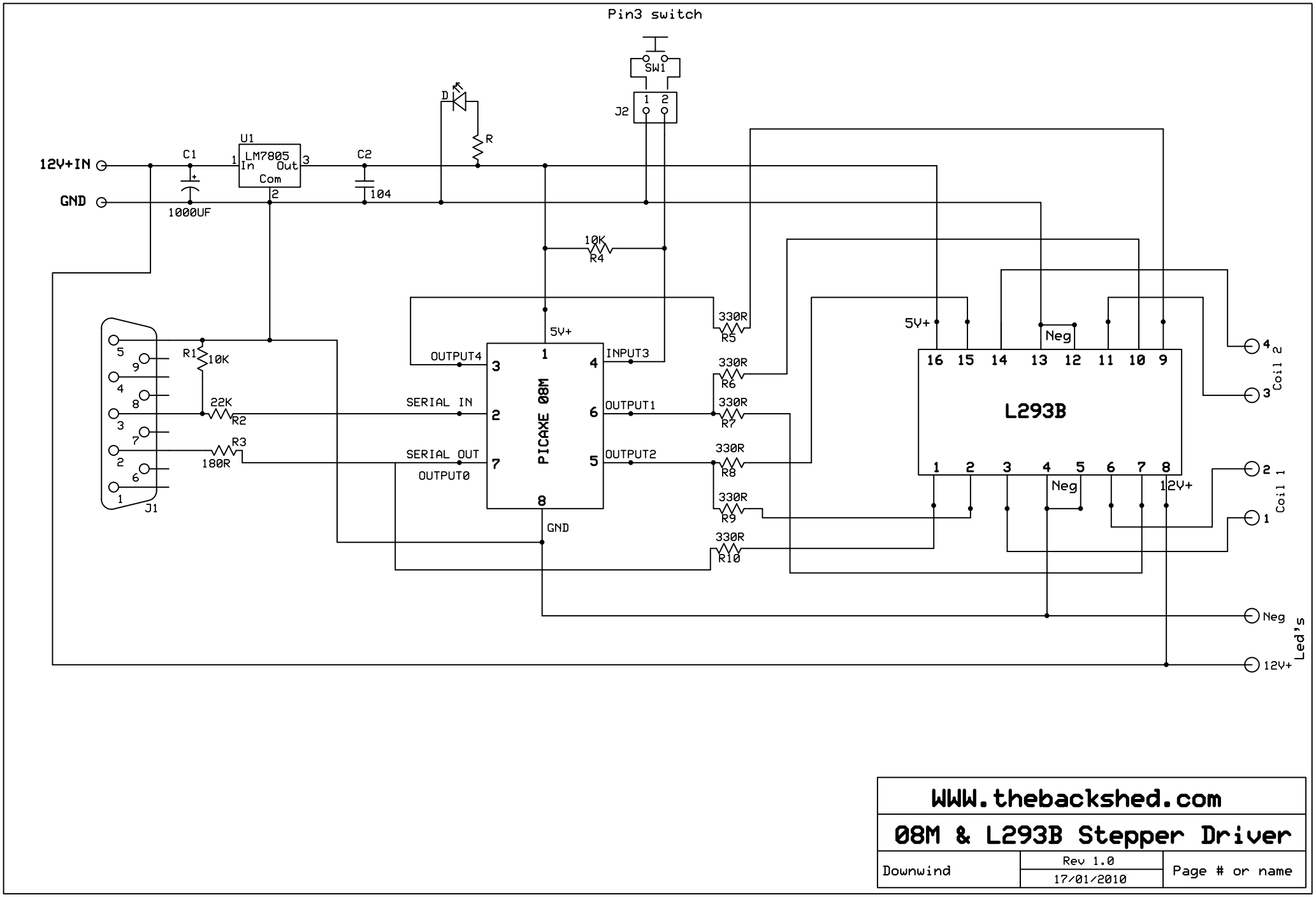

WWW.thebackshed.com		
08M & L293B Stepper Driver		
Downwind	Rev 1.0 17/01/2010	Page # or name